THEORETICAL PHYSICS

Updated Oct. 2023

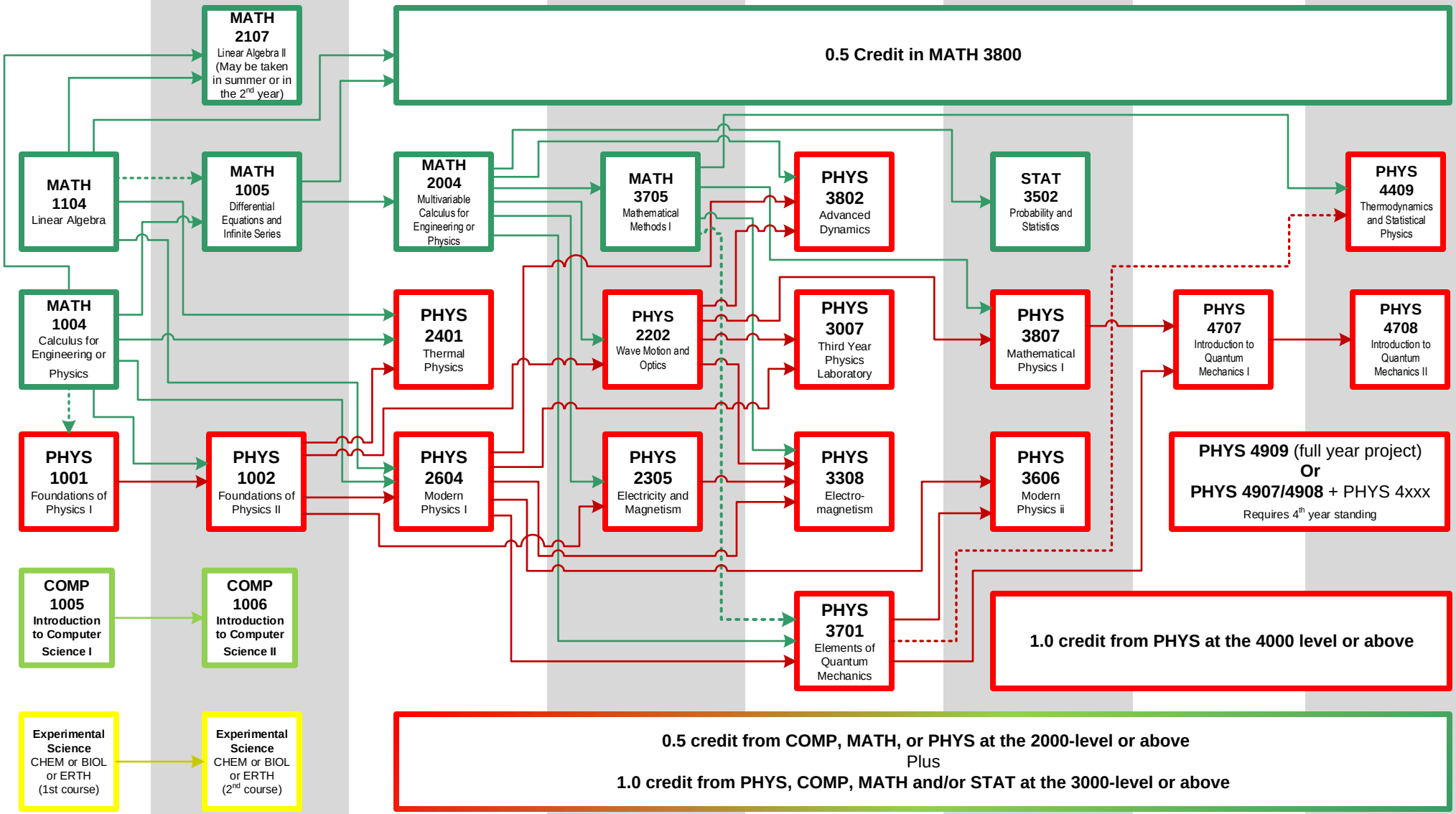

2.0 credits in Approved courses outside the faculties of Science and Engineering and Design, one of which can be **NSCI 1000**
Plus
1.0 credit in free electives

Carleton University
Department of Physics

- Physics
- Mathematics and Statistics
- Other Experimental Sciences
- Computer Programming
- Electronics
- Electives

Note:
- Dashed connecting lines indicate concurrent prerequisite.
- Some Experimental Science, COMP, ELEC and MATH, and many elective courses are also offered in summer, which may help to reduce your course load in the Fall and Winter terms.